DATE	DESCRIPTION	REV.
8.24.10	CHANGE AS PER ECN 10–062	A
10.04.10	CHANGE AS PER ECN 10–069	B
10.26.10	CHANGE AS PER ECN 10–075	C
4.12.11	CHANGE AS PER ECN 11–049	D
10.08.13	CHANGE AS PER ECN 13–092	E
1.04.17	ECN 17–004, F1 WAS 2.822	F
1.11.19	ECN 19–002, BASE WAS NYLON 46	G
8.08.19	ECN 19–064, UPDATE MTG LAYOUT H1 WAS .630 [16.00]	H
11.16.20	ECN21–001,BASE COLOR WAS BLACK	J
9.04.25	UPDATED MTG LAYOUT (K1) WAS .620 [15.74]	K

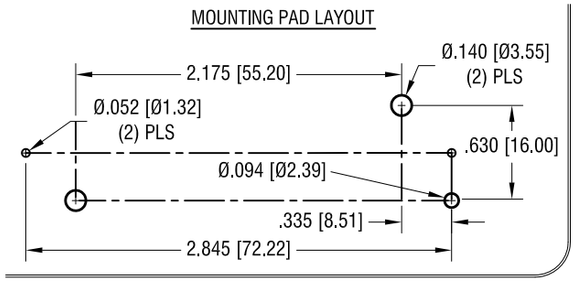

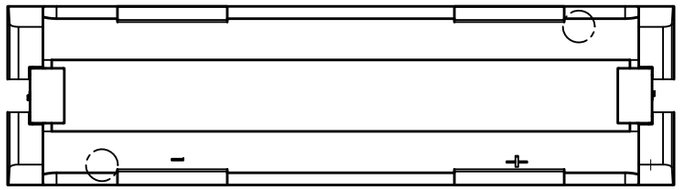

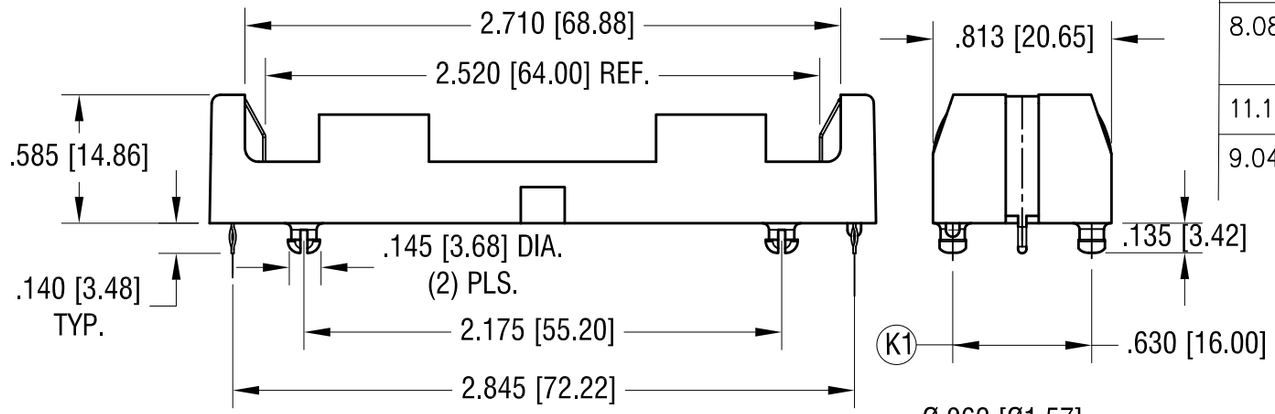

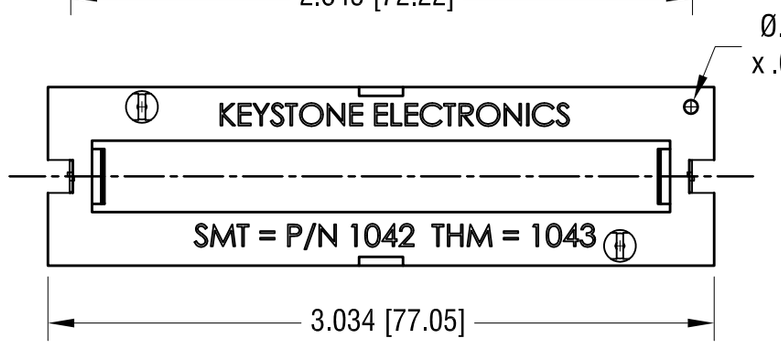

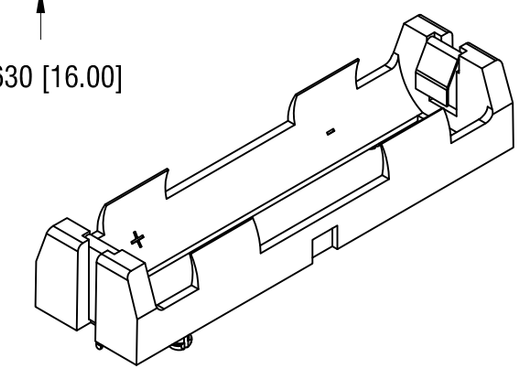

NOTE:

1. BASE:
   MAT'L: PBT, UL 94V-0 (GRAY COLOR)
2. CONTACT:
   MAT'L: .012 [0.30] THK STAINLESS STEEL
   FINISH: TIN NICKEL PLATE
3. CAN BE USED WITH BATTERIES WITH CIRCUIT PROTECTION: 67mm MAX. LENGTH

THIS DOCUMENT IS THE PROPERTY OF KEYSTONE ELECTRONICS CORP. AND SHALL NOT BE REPRODUCED, DISTRIBUTED OR USED AS A BASIS FOR MANUFACTURE WITHOUT PRIOR WRITTEN PERMISSION FROM KEYSTONE ELECTRONICS CORP.

KEYSTONE ELECTRONICS CORP.
www.keyelco.com • NEW HYDE PARK, NY 11040 • Tel (516) 328-7500

PART NAME: THM BATTERY HOLDER, 18650

MATERIAL: AS NOTED

FINISH: AS NOTED

DRN BY: NT | DATE: 8.19.10

APP'D: RH | SCALE: 1.25X

TOLERANCES UNLESS OTHERWISE SPECIFIED — INCH [MM]
DECIMAL ± .010 [± 0.25]
ANGULAR ± 1°

CODE: C

DWG NO. 1043