THIS DOCUMENT IS THE PROPERTY OF KEYSTONE ELECTRONICS CORP. AND SHALL NOT BE REPRODUCED, DISTRIBUTED OR USED AS A BASIS FOR MANUFACTURE WITHOUT PRIOR WRITTEN PERMISSION FROM KEYSTONE ELECTRONICS CORP.

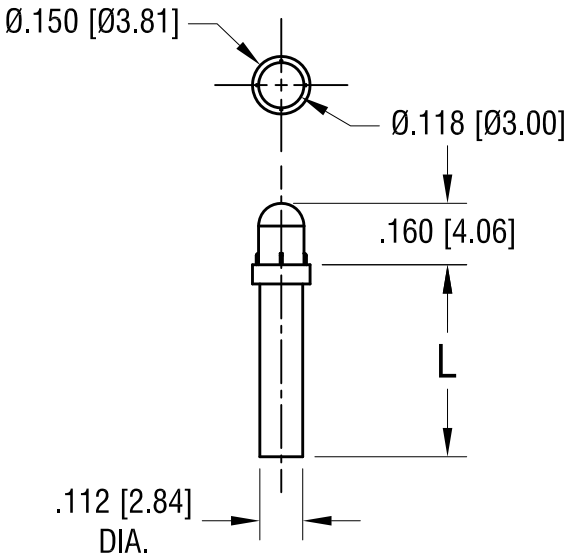

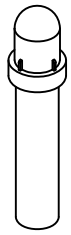

P/N: 8697

PART NO.	'L' DIM.
8693	.125 [3.18]
8694	.250 [6.35]
8695	.350 [8.89]
8696	.375 [9.53]
8697	.500 [12.70]
8698	.625 [15.88]
8699	.750 [19.05]

NOTES:
1. MOUNTING HOLE SIZE: .118 [3.00]
2. MATERIAL: POLYCARBONATE, UL94-V2
   COLOR: TRANSPARENT.

DATE	DESCRIPTION	REV.

KEYSTONE ELECTRONICS CORP.

www.keyelco.com • NEW HYDE PARK NY 11040 • Tel (516)328-7500

PART NAME: LIGHT PIPE			
MATERIAL: AS NOTED			
FINISH: NONE	DRN BY: LV	DATE: 7.11.25	
	APP'D: RH	SCALE: 1X	
TOLERANCES INCH [MM] DECIMAL ± .005 [± 0.13] ANGULAR ± 1° UNLESS OTHERWISE SPECIFIED	CODE: C	DWG NO.: 8693-8699	