THIS DOCUMENT IS THE PROPERTY OF KEYSTONE ELECTRONICS CORP. AND SHALL NOT BE REPRODUCED, DISTRIBUTED OR USED AS A BASIS FOR MANUFACTURE WITHOUT PRIOR WRITTEN PERMISSION FROM KEYSTONE ELECTRONICS CORP.

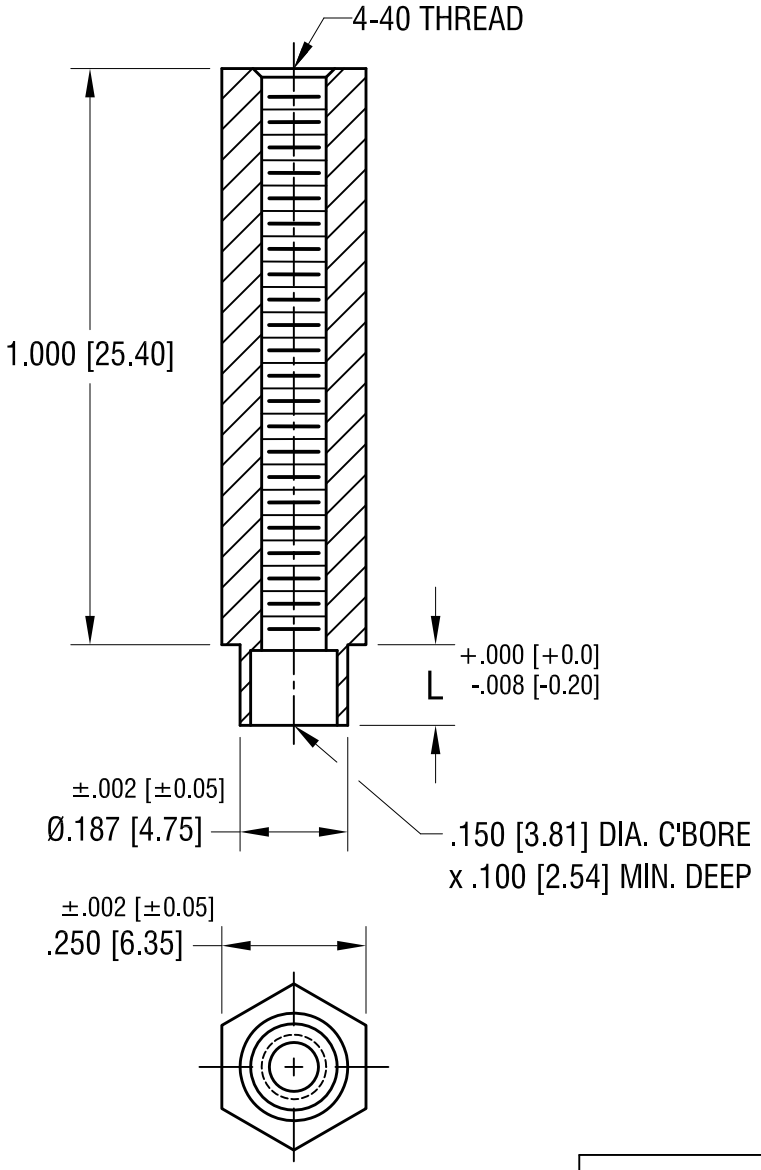

ACTUAL SIZE

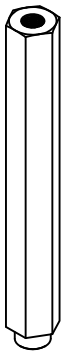

P/N 1630-2

PART NO.	'L' DIM.
1630-2	.109 [2.77]
1630-3	.140 [3.56]

KEYSTONE ELECTRONICS CORP.

www.keyelco.com • NEW HYDE PARK NY 11040 • Tel (516)328-7500

PART NAME: SWAGE THREADED STANDOFF

MATERIAL: BRASS

FINISH: DUCTILE NICKEL PLATE

DRN BY: BOONE | DATE: 5.13.02

APP'D: RH | SCALE: 3X

TOLERANCES INCH [MM]
DECIMAL ± .005 [± 0.13]
ANGULAR ± 1°
UNLESS OTHERWISE SPECIFIED

CODE: C

DWG NO. 1630-

DATE	DESCRIPTION	REV.
4.30.25	NO CHANGES TO PART.	B
11.22.21	SPECIFIED CHAMFER	A